DIGITAL ELECTRICITY® RECEIVER, 2500W, 56VDC OUTPUT

The CLRX2K56VDC Receiver (RX) is a component in a Digital Electricity® line powering system. When the receiver is powered by a compatible Southwire Transmitter (TX), a Digital Electricity® (DE) system is formed (see diagram). The circuit between the TX and RX is a Fault-Managed Power (FMP) circuit and is installed as a Class 4 circuit according to NFPA 70 Article 726. If a fault occurs on the DE line between the transmitter and receiver (such as a person contacting the conductors) power is disconnected; reducing the risk of fire, equipment damage, and personal injury.

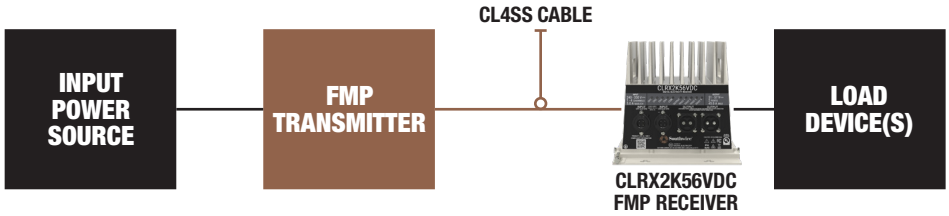



CLRX2K56VDC RECEIVER

ORDERING INFORMATION

MODEL	DESCRIPTION
CLRX2K56VDC	Digital Electricity Receiver, 4 pair in, 2.5 kW/56 Vdc out, IP66, Wall mount

ACCESSORIES (SOLD SEPARATELY)

MODEL	DESCRIPTION	NOTES
CON-56-2K-03	Connector mate kit for CLRX2K56VDC	Includes 1 input and 1 output connector mate
SS-RX-01	Sunshield for CLRX2K56VDC, Galvanized stainless steel, 16GA, Gray	For installations in direct sunlight
JBKIT-RX-4P-03	Input junction box kit for CLRX2K56VDC, IP66, Wall mount, Sun Resistant	For multiple RX or cable gauge transitions
PDKIT-RX-03	Output PDU kit for CLRX2K56VDC	For connecting multiple loads to the RX output or cable gauge transitions
PMK-03	Pole Mount Kit for JBKIT-4P-03 and PDKIT-03, Stainless steel, Hose clamp	2 to 12 in pole diameters
PMK-RX-01	Pole Mount Kit for CLRX2K56VDC, Stainless steel, Hose clamp 2-12.25in ID	2 to 12 in pole diameters
DXKIT-4P-03	DE Disconnect Kit	Manual disconnect switch to de-energize the RX for maintenance of the RX or loads

NOTE

For Class 4 compliance, the CLRX2K56VDC receiver unit must be used with a compatible Southwire transmitter. For a full list of compatible transmitters scan the QR code.
Any UL 1400-2 listed Class 4 cable may be used.

Southwire CABLETECH SUPPORT™ Services

©2026 Southwire Company, LLC. All rights reserved.
*Registered Trademark & ™Trademark of Southwire Company, LLC.

SPECIFICATIONS

TYPE	PARAMETER	SPECIFICATIONS	NOTES
INPUT	Voltage	240-350 Vdc (Nominal 350 Vdc)	Must be supplied by a UL Recognized or Listed Southwire transmitter shelf.
	Number of Ports	2	Each port has 2 channels.
	Number of Channels	4	
	Current Per Input Channel	5.0 A Max	
	Current, Total	12.0 A Max	
	Input Wire	14-18 AWG	
	Input Cable Diameter	0.24-0.49 in (6.0-12.5 mm)	
OUTPUT	Voltage	51-57 Vdc (Nominal 56 Vdc)	
	Number of Ports	2	each port has +/-.
	Current Per Output Port	45.0 A Max	
	Current, Total	45.0 A Max	
	Output Wire	8 AWG	
	Output Cable Diameter	0.57-0.75 in (14.5-19.0 mm)	
	Output Mode	Constant Voltage	
EFFICIENCY	Typical Efficiency	95% at full load	
ENVIRONMENT	Operating Temperature	-40 °C (-40 °F) to 70 °C (158 °F)	Cold Start limited to -20 °C (-4 °F). Derate after 46 °C (See page 3 for temperature derating curve).
	Altitude	Up to 2000 m	
	Weatherproofing	IP66	Per IEC 60529. Unit must be oriented with panel mount connectors facing down to achieve IP rating.
MECHANICAL	Dimensions	18.99 x 7.98 x 7.60 in (482.3 x 202.8 x 193.1 mm)	(See page 3)
	Weight	24 lbs (without sunshield) 30 lbs (with sunshield)	
PROTECTION	Common Mode Surge	6 kV Max	Up to 5 surges.
	Differential Mode Surge	1 kV Max	Up to 5 surges.
	Over Load	100-115% rated current	Output voltage shuts down after 5 seconds. Automatically recovers once output voltage falls.
	Over Voltage	60-67 Vdc	Output voltage shuts down.
	Over Temperature	Output voltage shuts down	Automatically recovers once temperatures go down.
APPROVALS	Safety	UL 1400-1 UL 62368-1 EN IEC 62368-1 CAN/CSA-C22.2 No. 62368-1	
	EMC	FCC Part 15 Subpart B Class A ICES-003 Class A EN 55032 Class A EN 55035 (multimedia equipment) EN 50121-4 (rail immunity) EN 300 386 (telecom immunity)	
	Other	CE, RoHS, WEEE, UKCA, REACH, ISTA 3A	
ACCESSORIES	Hardware Kit (Included)	(1) Amphenol 4-position female field connector, P/N: C01620D00311010 (1) Amphenol 2-position male field connector, P/N: PWM-02BFMB-TL7001 (1) 2 Hole Compression Lug, #10 stud, 6 AWG, P/N: YAV6CL2TC10FX (2) 18-8 locknut, external-tooth lock washer, 10-32, P/N: 96278A411	

©2026 Southwire Company, LLC. All rights reserved.
*Registered Trademark & ™Trademark of Southwire Company, LLC.

DETAILED DIMENSIONS - INCHES (MM)

WITHOUT SUNSHIELD

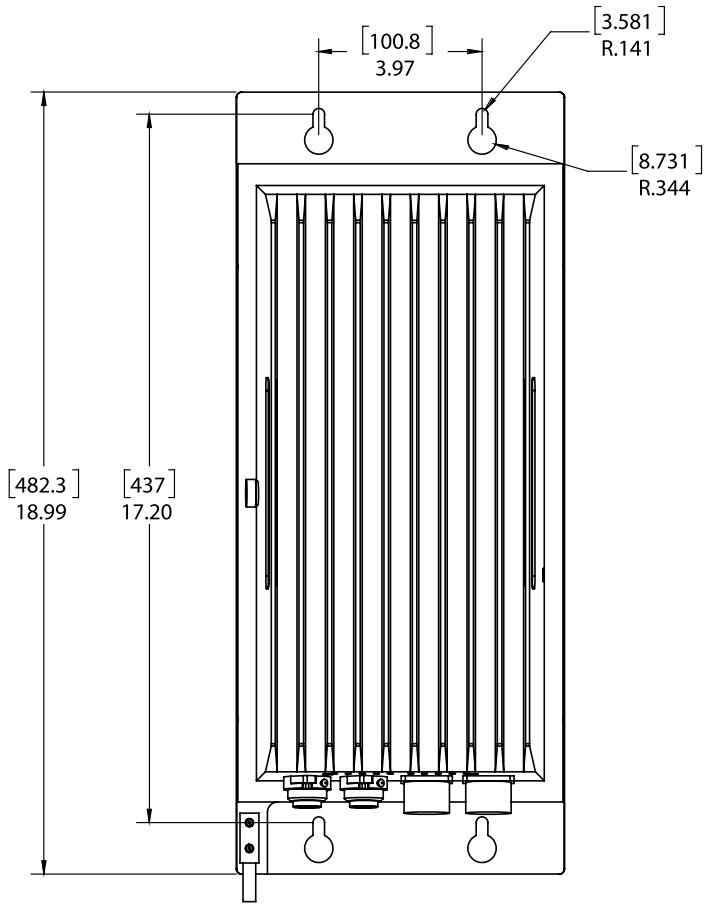

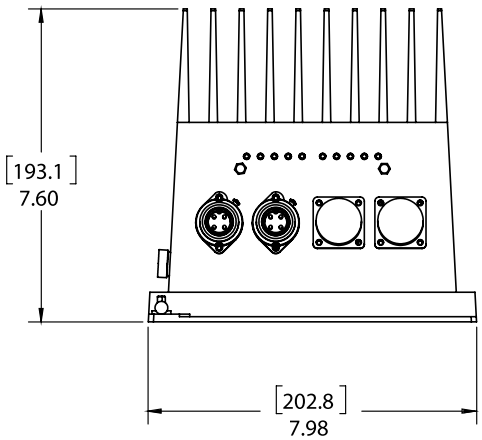

WITH SUNSHIELD

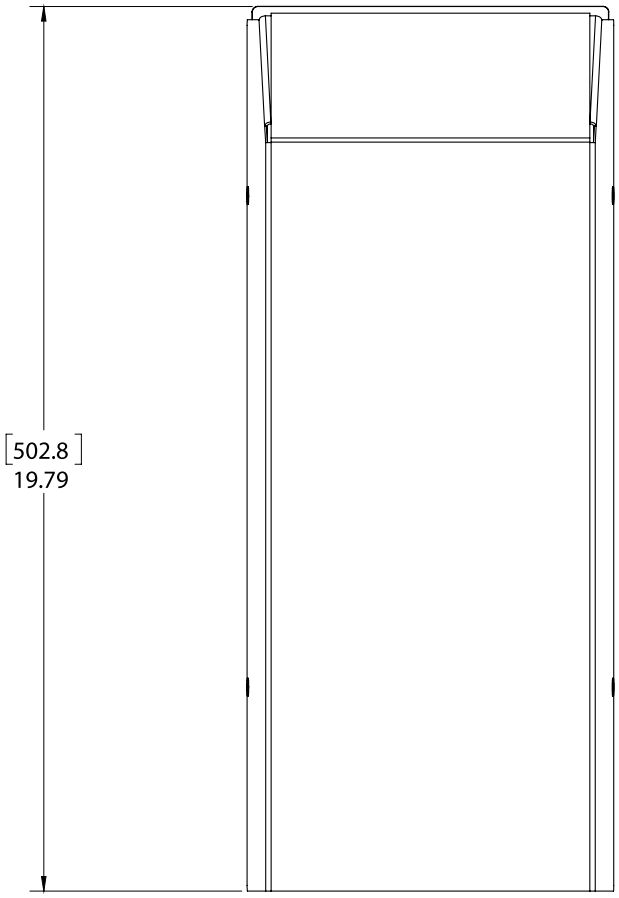

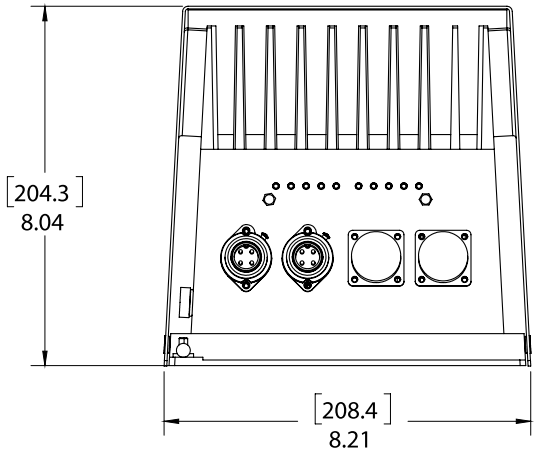

©2026 Southwire Company, LLC. All rights reserved.
*Registered Trademark & ™Trademark of Southwire Company, LLC.

CONNECTION DIAGRAM

DIGITAL ELECTRICITY INPUT PORT **1**
Two (2) ports, two (2) channels per port, two (2) conductors per channel, 18 AWG minimum, 14 AWG maximum (16 AWG recommended).

PROTECTIVE EARTH GROUND TERMINAL **3**
Ground connection for receiver, 2-hole compression lug, 8 AWG minimum (6 AWG recommended if surge protection is required).

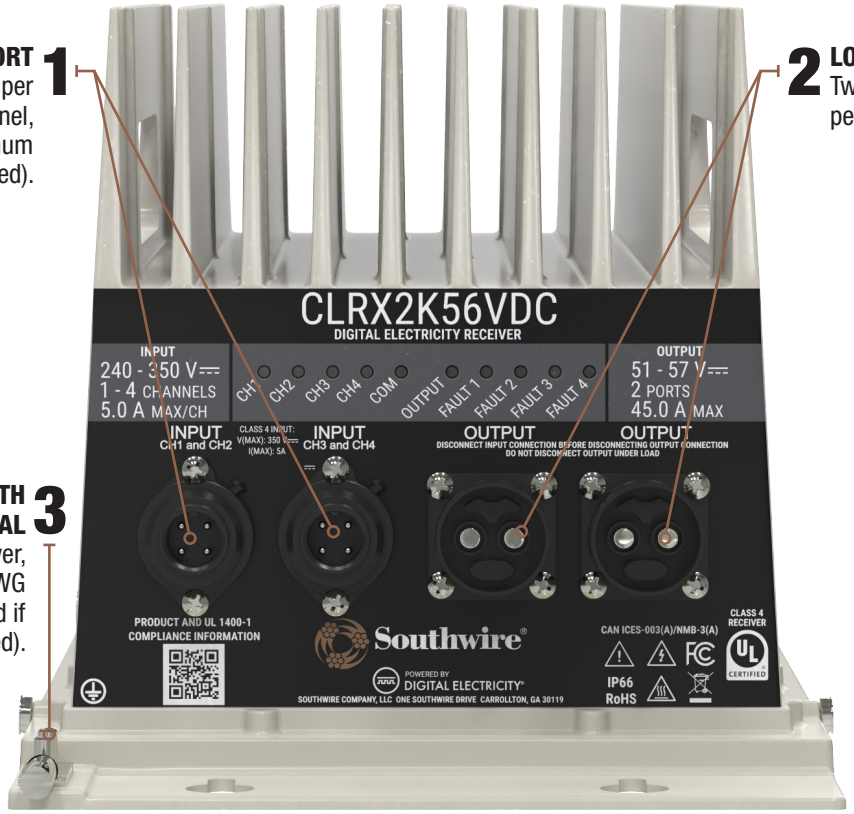

LOW VOLTAGE DC OUTPUT PORT **2**
Two (2) ports, two (2) conductors per port, 8 AWG minimum required.

TEMPERATURE DERATING CURVE

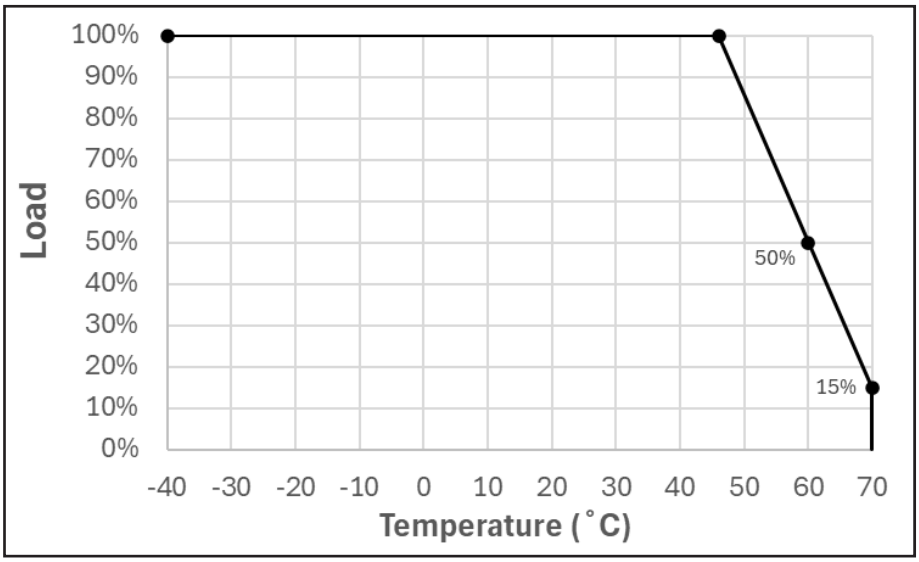

©2026 Southwire Company, LLC. All rights reserved.
*Registered Trademark & ™Trademark of Southwire Company, LLC.

WARNING!

Ensure that the unit is de-energized before contacting any exposed conductors. The output circuit is not a protected FMP / Class 4 circuit.

Do not open the unit. There are no serviceable parts within the unit.

The minimum wire gauge for use with Southwire Transmitters is 18 AWG copper conductors.

Southwire RX Receiver inputs are intended to be powered by Southwire TX Transmitter products only. Ensure that only Southwire TX Transmitter products are used as sources of power for this receiver unit.

The voltage rating of the transmission wiring between Southwire Transmitter and Receiver(s) must be a minimum of 450 Vrms.

Equipment is intended for installation in a Restricted Access Area. Per IEC 62368-1, a Restricted Access Area is defined as an area accessible only to skilled persons and to instructed persons with the proper authorization.

This equipment is not suitable for use in locations where children are likely to be present.

FCC CAUTION

Any changes or modifications not expressly approved by the party responsible for compliance could void the user's authority to operate this equipment.

Note: This equipment has been tested and found to comply with the limits for a Class A digital device, pursuant to part 15 of the FCC Rules. These limits are designed to provide reasonable protection against harmful interference when the equipment is operated in a commercial environment. This equipment generates, uses, and can radiate radio frequency energy and, if not installed and used in accordance with the instruction manual, may cause harmful interference to radio communications. Operation of this equipment in a residential area is likely to cause harmful interference in which case the user will be required to correct the interference at their own expense.
CAN ICES-003(A) / NMB-003(A)

SYMBOLS

Caution: Hazardous Voltages present when energized. Do not open the unit.

Caution: Hot Surface when energized. Do not touch the unit.

This symbol indicates the protective earth ground terminal for the device. See "Grounding" section below for more information.

WARRANTY STATEMENT

There are no serviceable parts within the CLRX2K56VDC. Opening or modifying the unit and/or factory attached cables will void the warranty.

©2026 Southwire Company, LLC. All rights reserved.
*Registered Trademark & ™Trademark of Southwire Company, LLC.

INSTALLATION INSTRUCTIONS

CAUTION

Input and Output wiring and over-current protection must be installed in accordance with all local and national electrical codes and requirements.

PHYSICAL INSTALLATION

The CLRX2K56VDC is intended to mount vertically with the cable glands positioned at the bottom. It should not be mounted directly above a heat source.
IMPORTANT: Unit must be oriented with connectors facing down to maintain IP rating and maximize cooling.

NOTE: For indoor installations, the unit may be mounted horizontally with the heat sink fins positioned at the top.

INSTALLATION METHODS

Wall Mount Installation: To mount the unit on the wall, refer to the location of the 4 mounting holes on page 3. Use 1/4" screws that are appropriate for the wall material.

Pole Mount Installation: To mount the unit on a pole, refer to the instructions included with the pole mount accessory kit.
IMPORTANT: Unit must be mounted on a pole with diameter of 7 in to 12 in.

Sunshield Installation: The sunshield must be installed after the unit is mounted. Install the sunshield on the unit in the orientation shown on page 3. Torque the 4 screws (P/N: Southco F5-832-P6) installed in the sunshield to 25 in-lb.
IMPORTANT: Unit must have the sunshield installed if exposed to direct sunlight.

GROUNDING

The CLRX2K56VDC Receiver must be properly grounded to the user's facility earth connection for safe operation. An 8 AWG or larger ground wire must be used, 6 AWG is recommended if surge protection is required.The supplied compression lug accepts 6 AWG. Torque the grounding terminal mounting nuts (included in hardware kit) to 31 in-lb. The positive or negative output conductors do not need to be grounded for proper functionality.
If pole-mounted, the ground wire must be 6 AWG and go to one of the following places:
A) Cable suspension strand or support wire on the pole;
B) AC input power-system grounded neutral;
C) Ground rod.

GENERAL

DO NOT connect a load while the CLRX2K56VDC Receiver is running.
The CLRX2K56VDC must be de-energized prior to wiring the load device.

METHOD OF DISCONNECT FROM POWER

To disconnect the CLRX2K56VDC Digital Electricity Receiver unit from power, unplug ALL corresponding channels from the DE Transmitter Chassis either at the transmitter location or at the receiver by separating the input quick connector.

WARNING

Do not disconnect output under load.

Disconnect input connection before disconnecting output connection.

FIELD ASSEMBLED CONNECTORS

The CLRX2K56VDC includes one (1) input connector mate and one (1) output connector mate. These connectors are field assembled. The components of each assembly are shown below.

Input Connector



Output Connector



©2026 Southwire Company, LLC. All rights reserved.
*Registered Trademark & ™Trademark of Southwire Company, LLC.

INSTALLATION INSTRUCTIONS

1. The input and output wiring must be terminated appropriately at the installation site following the instructions below.
2. Strip off the jacket from the end of the cable according to the diagrams below.
3. If present, peel back and remove the foil shield and drain wire.
4. Strip the insulation from each conductor according to the diagrams below.

INPUT WIRING

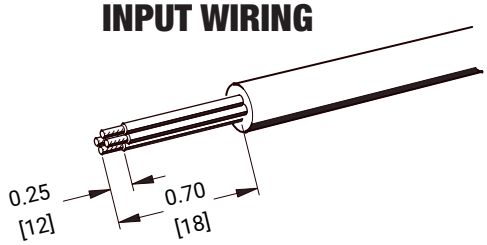

INPUT FIELD CONNECTOR PIN-OUT

Input Connector A | Input Connector B

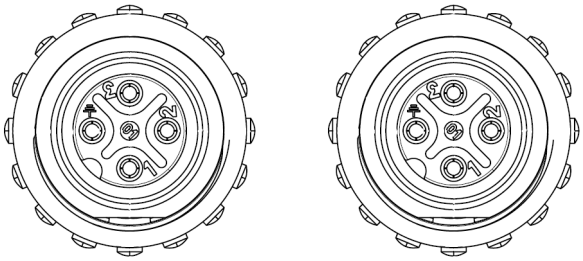

	PIN	DESCRIPTION	
A	1	DE Input Channel 1	Pos(+)
	2		Neg(-)
	3	DE Input Channel 2	Pos(+)
	⏚		Neg(-)
B	1	DE Input Channel 3	Pos(+)
	2		Neg(-)
	3	DE Input Channel 4	Pos(+)
	⏚		Neg(-)

INPUT FIELD CONNECTOR ASSEMBLY

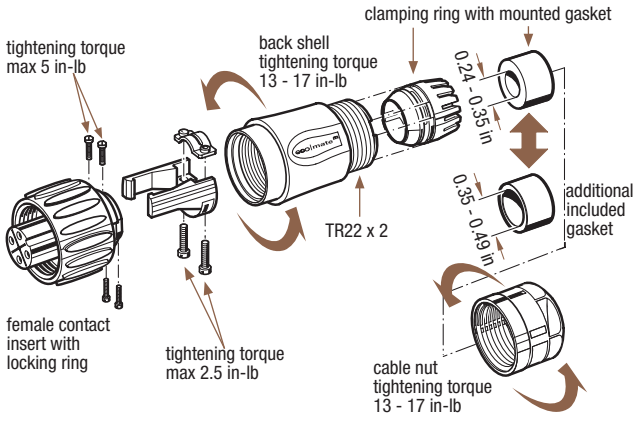

OUTPUT WIRING

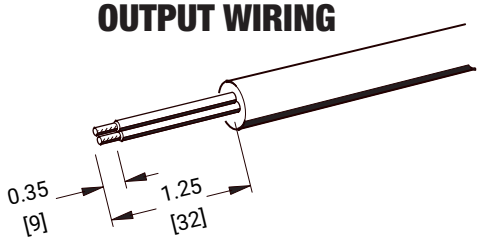

OUTPUT FIELD CONNECTOR PIN-OUT

Input Connector A | Input Connector B

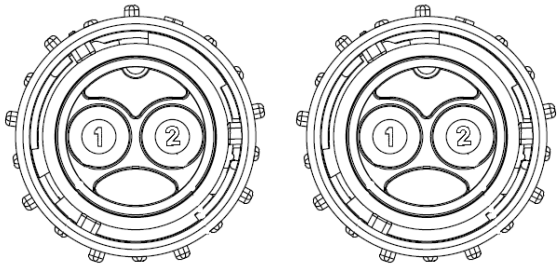

	PIN	DESCRIPTION	
A	1	LVDC Out +	Pos(+)
	2	LVDC Out -	Neg(-)
B	1	LVDC Out +	Pos(+)
	2	LVDC Out -	Neg(-)

INPUT FIELD CONNECTOR ASSEMBLY

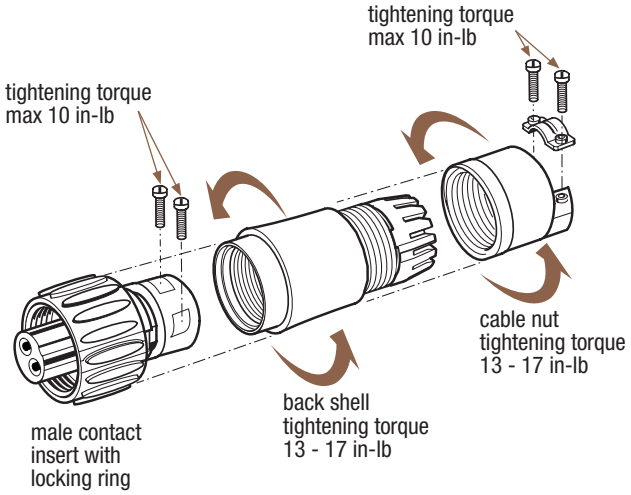

©2026 Southwire Company, LLC. All rights reserved.
*Registered Trademark & ™Trademark of Southwire Company, LLC.

INSTALLATION INSTRUCTIONS

LED STATUS UNDER NORMAL CONDITIONS



DE INPUT CHANNEL INDICATORS

The channel LED indicators (CH#) illuminate when the channel is active and delivering power.

LED STATUS	STATE
SOLID GREEN	Channel is active and delivering power
OFF	Channel is inactive and not delivering power

TROUBLESHOOTING

If the Channel LED indicator is OFF:
- Ensure the DE channel is enabled in the TX software.
- Check DE wiring and connections for damage, open circuit, or ground faults.

IN-LINE COMMUNICATION (ILC) INDICATOR

The COM LED indicates the status of ILC.

LED STATUS	STATE
BLINKING BLUE	ILC is active
OFF	ILC in-active

OUTPUT INDICATOR

The output LED indicator illuminates when the output is active and delivering power.

LED STATUS	STATE
GREEN	Output is active and delivering power
OFF	Output is inactive and not delivering power

TROUBLESHOOTING

If the Output LED indicator is OFF:
- Ensure the RX output is enabled in the TX software.
- Check Fault LED status.

FAULT INDICATORS

When a fault occurs, one or more of the FAULT LED's will turn red. Use the table below to identify the and troubleshoot the issue.

FAULT CODE	TROUBLESHOOTING
FAULT 1 - LOAD	Issue delivering power from the RX to the load: • Check wiring between RX and load • Reduce load
FAULT 2 - ENVIRONMENTAL	Receiver over temperature: • Reduce ambient temp surrounding receiver • Reduce load
FAULT 3 - INTERNAL	Internal Failure • Contact Southwire
FAULT 4 - INPUT/ OTHER	Issue delivering power from TX to RX: • Check wiring between TX and RX • Consider adding more DE input channels

©2026 Southwire Company, LLC. All rights reserved.
*Registered Trademark & ™Trademark of Southwire Company, LLC.

AVERTISSEMENT!

Assurez-vous que l'appareil est mis hors tension avant de faire du contact avec des conducteurs nus. Le circuit de sortie n'est pas protégé par un circuit FMP/Classe 4.

N'ouvrez pas l'appareil. Il n'y a aucune pièce réparable dans l'unité.

Le calibre de fil minimum à utiliser avec les émetteurs Southwire GEN2 est constitué de conducteurs en cuivre de 18 AWG.

Les entrées du récepteur Southwire RX sont destinées à être alimentées uniquement par les produits émetteurs Southwire TX. Assurez-vous que seuls les produits émetteurs Southwire TX sont utilisés comme sources d'alimentation pour ce récepteur.

La tension nominale du câblage de transmission entre l'émetteur Southwire et le(s) récepteur(s) doit être 450 Vrms au minimum.

Équipement destiné à être installé dans une zone à accès restreint. Selon la norme IEC 62368-1, une zone d'accès restreint est définie comme une zone accessible uniquement aux personnes qualifiées disposant de l'autorisation appropriée.

Cet équipement ne convient pas à une utilisation dans des endroits où des enfants sont susceptibles d'être présents.

SYMBOLES

Attention: Des tensions dangereuses sont présentes lorsque l'appareil est sous tension. N'ouvrez pas l'appareil.

Attention: Surface chaude lorsqu'elle est sous tension. Ne pas toucher l'appareil.

ATTENTION

Le câblage d'entrée et de sortie et la protection contre les surintensités doivent être installés conformément à tous les codes et exigences électriques locaux et nationaux

AVERTISSEMENT

Ne pas déconnecter la sortie sous charge.

Déconnectez la connexion d'entrée avant de déconnecter la connexion de sortie.

©2026 Southwire Company, LLC. All rights reserved.
*Registered Trademark & ™Trademark of Southwire Company, LLC.