UNIVERSAL SPLIT BOX ROLLER WITH SIDE TRAY CLAMP (HB1A-9STC)
MATERIAL #65103301

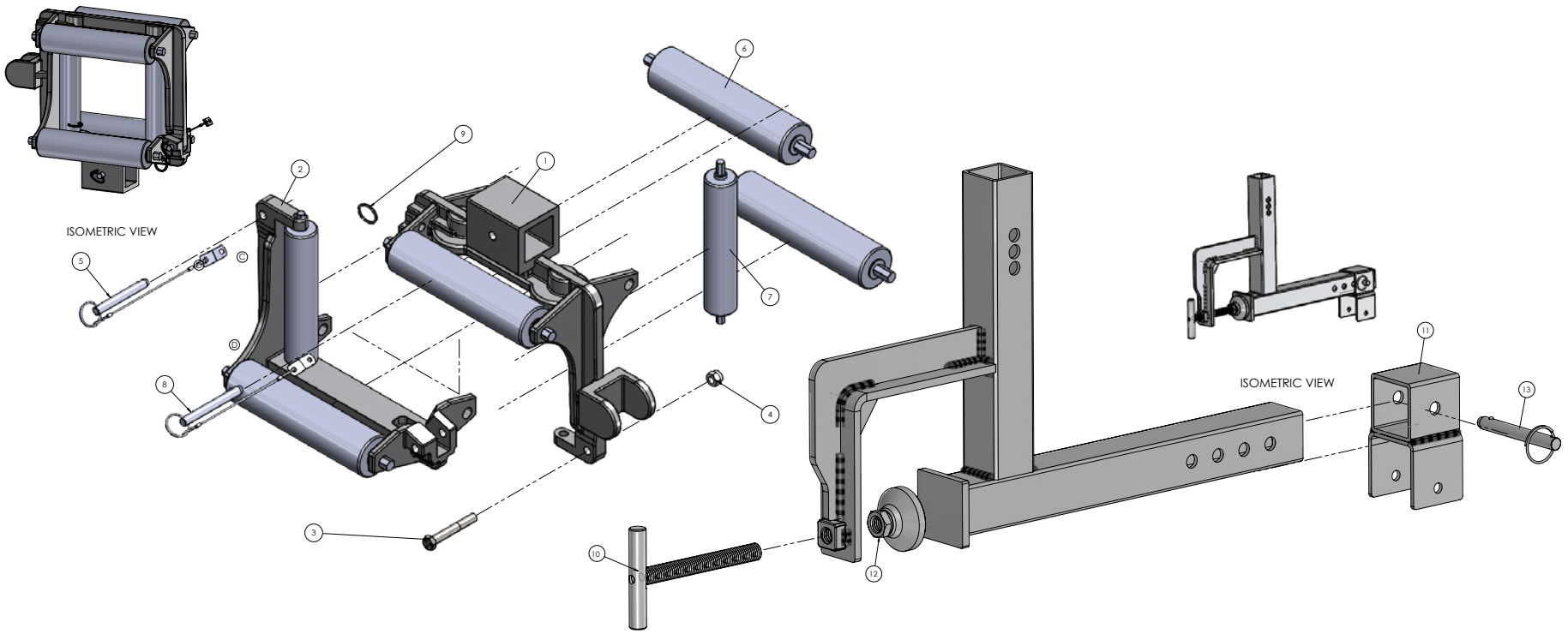

Item	Stock Number	Model	Description
1	73633540	HB1A-9-01	CASTING, BOTTOM, FOR HB1A-9 BOX ROLLER
2	73633640	HB1A-9-02	CASTING, TOP, FOR HB1A-9 BOX ROLLER
3	91247A634*	MCMASTER-CARR	MEDIUM STRENGTH GRADE 5 STEEL HEX HEAD SCREW, ZINC PLATED, 3/8" -16 THREAD SIZE 2-1/2" LONG PARTIALLY THREADED
4	95615A140*	MCMASTER-CARR	MEDIUM STRENGTH STEEL NYLON-INSERT LOCKNUT GRADE 5 ZINC PLATED, 3/8"-16 THREAD SIZE
5	94975A578*	MCMASTER-CARR	18-8 STAINLESS STEEL RING-GRIP QUICK-RELEASE PIN WITH LANYARD, 3/8" DIAMETER, 2-3/16" USABLE LENGTH
6	73633740	KG08	ROLLER, 1.9" DIAMETER USED ON HB1A-9 & HB9A
7	73633840	EFG07	ROLLER, 1.38" DIAMETER USED ON HB1A-9
8	94975A591*	MCMASTER-CARR	18-8 STAINLESS STEEL RING-GRIP QUICK-RELEASE PIN WITH LANYARD, 3/8" DIAMETER, 2-5/8" USABLE LENGTH
9	90990A250*	MCMASTER-CARR	18-8 STAINLESS STEEL SPLIT RING 31/32" OD, 51/64" ID, 1/8" THICK
10	73634140	HB-10-0056	HANDLE, HB-TEE
11	73633440	TR-040	ADAPTER STC
12	6103K221*	MCMASTER-CARR	SWIVEL LEVELING MOUNT
13	98320A386*	MCMASTER-CARR	ZINC-PLATED STEEL RING-GRIP QUICK-RELEASE PIN, 3/8" DIAMETER, 2-5/8" USABLE LENGTH

*Indicates a McMaster-Carr Part that can be purchased at www.mcmaster.com

Southwire®

1-855-798-6657 | SOUTHWIRE.COM

©2025 Southwire Company, LLC. All rights reserved.
®Registered Trademark & ™Trademark of Southwire Company, LLC.