Job Name/Title:_____ Model #:_____ Contractor:_____

Southwire™

PATENT PUSH-IN AND QUICK LOCK STEEL COUPLINGS

FEATURES

- Fastest way/time saving to install EMT conduits, as well as Rigid, IMC and RGC conduits & tool free, just push-in
- Over 80% quicker install than conventional fittings
- UL Standard 514B



SICP-50

APPLICATION

- UL 797 EMT conduits ½" to 4"
- UL 6 GRC, RMC, IMC conduit 2-1/2" to 4"

MATERIAL/FINISH

- Steel constructed/ Zinc plated

CERTIFICATIONS

- cULus listed E33622

PART #	SIZE	MASTER QTY.	WEIGHT/ CASE (LBS.)	A	B
SICP-50	1/2"	50	9.4	2.70"	1.36"
SICP-75	3/4"	50	12.83	2.87"	1.60"
SICP-I00	1"	25	9.13	3.14"	1.84"
SICP-125	1 1/2"	25	13.82	3.30"	2.22"
SICP-I50	1 1/2"	25	15.77	3.39"	2.54"
SICP-200	2"	10	8.23	3.71"	3"
SICP-250	2 1/2"	10	16.24	4.27"	3.90"
SICP-300	3"	5	9.15	4.35"	4.48"
SICP-350	3 1/2"	5	12.21	4.60"	5.16"
SICP-400	4"	5	13.57	4.65"	5.63"

2-1/2", 3", 3-1/2" and 4" are UL and cULus Listed for Rigid/IMC/EMT Conduits

c UL us LISTED

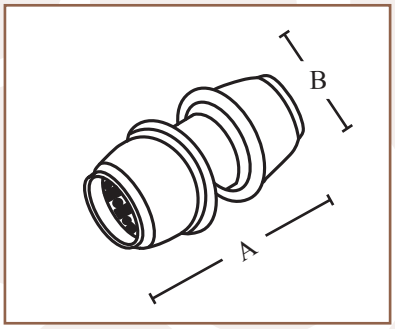

Rev. 0, 05/24

BUILT FOR DURABILITY.
BUILT FOR RELIABILITY.
BUILT FOR WORK.™

1-855-798-6657 | SOUTHWIRE.COM

©2024 Southwire Company, LLC. All rights reserved.
*Registered Trademark & ™Trademark of Southwire Company, LLC.