6 KW DIGITAL ELECTRICITY® TRANSMITTER

The CLTX6K3 Transmitter is a component in a Digital Electricity® line powering system. When the transmitter is paired with a compatible Southwire receiver, a Digital Electricity® (DE) system is formed (see diagram). The circuit between the transmitter and receiver is a Fault-Managed Power (FMP) circuit and is installed as a Class 4 circuit according to NFPA 70 Article 726. If a fault occurs on the DE line between the transmitter and receiver (such as a person contacting the conductors) power is disconnected; reducing the risk of fire, equipment damage and personal injury.



CLTX6K3 FRONT VIEW



CLTX6K3 REAR VIEW

FEATURES

- Efficiency up to 96% for DC input and 94% for AC input
- Four Fault-Managed outputs capable of up to 1.5 kW each, 6 kW total
- Remote monitoring and control
- In-line communications from FMP TX to RX
- Output Protections:
  - Short Circuit
  - Under Voltage
  - Over Voltage
  - Overload
  - Over Temperature
- Web GUI, Rest API, SNMP v3
- 3 year warranty

APPLICATIONS

- 5G Small Cell, DAS, & D-RAN Radios
- Broadband & Fixed Wireless Access (FWA)
- Smart Building PoE Switches & GPON ONTs
- Industry 4.0 Control Racks & Cabinets
- Temporary Remote Power
- Rail & Transit

NOTE

For Class 4 compliance, the CLTX6K3 transmitter unit must be used with compatible Southwire receivers. For a full list of compatible receivers scan the QR code below. Any UL 1400-2 listed Class 4 cable may be used.

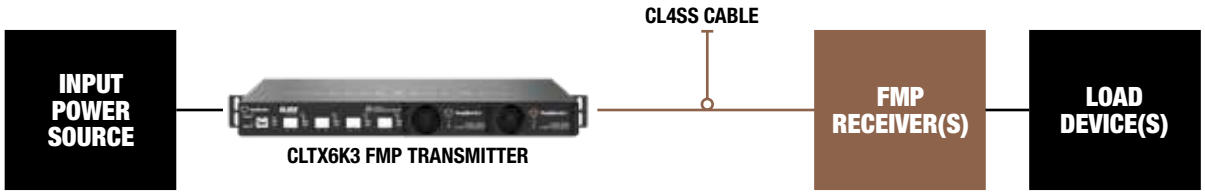

Southwire CABLETECH SUPPORT™ Services

©2026 Southwire Company, LLC. All rights reserved.
*Registered Trademark & ™Trademark of Southwire Company, LLC.

SPECIFICATIONS

TYPE	PARAMETER	SPECIFICATIONS	NOTES
INPUT	Voltage	100 - 277 Vac 260 - 400 Vdc	AC input voltage must be 208 Vac or greater for full power operation.
	Max Current per Input	16 A rms 12.2 A	Minimum circuit breaker size is 20 A per input connection.
OUTPUT	Voltage	315 - 350 Vdc	Digital Electricity / FMP / Class 4 input
	Total Power per Shelf	Up to 6 kW	For greater than 3 kW operation, two power modules must be powered.
	Number of Output Channels	4	
	Max Current per Channel	4.68 A	Use design rules for calculating delivered power.
	No Load Power Consumption	40 W max	Based on fully populated unit (two power modules are installed)
	Output Wiring Size	18 - 12 AWG	
	Max Distance	6000 ft	
	Recommended Cable Capacitance	40 pF/ft (131.2 pF/m) max.	Higher capacitance cables may reduce performance.
ENVIRONMENT	Access Location	Operator Accessible	
	Operating Temperature	-20 °C (-4 °F) to 50 °C (122 °F)	Requires operation in a conditioned environment to ensure reliable operation. Derate after 40 °C with 1U spacing [See page 3 & 4 for temperature derating curve].
	Altitude	Up to 2000 m	
	Humidity	20% to 70% Non-condensing	
MECHANICAL	Dimensions	(See page 4)	Fits 19" (482.6 mm) and 23" (584.2 mm) racks
	Weight	16.55 lbs	Weight of fully populated unit (two power modules are installed)
PRODUCT LIFETIME	Safe Lifetime	30 years max	Dependent on use case
	MTBF	580,922 hrs	
APPROVALS	Safety	UL 1400-1[1] UL 62368-1 EN IEC 62368-1 CAN/CSA C22.2 No. 62368-1 IEC 61508 ATIS-0600040[2]	[1]Evaluated as part of a FMP system by Underwriters Laboratories.
	EMC	FCC Part 15 Subpart B Class A ICES-003 Class A EN 55032 Class A EN 55035 (multimedia equipment) EN 50121-4 (rail immunity) EN 300 386 (telecom immunity)	
	Other	CE, RoHS, WEEE, UKCA, REACH, ISTA 3A	
COMMUNICATION	Ethernet	RJ45, 10/100 Mbps	Remote monitoring and control via web GUI, SNMP v1/v3.
	Dry Contact Alarm Output	1x Normally Open (NO) 1x Normally Closed (NC)	Supports alarm circuitry with maximum steady state current of 500 mA at 25 °C. [See page 5]
	Dry Contact Alarm Input	1x Normally Open (NO) 1x Normally Closed (NC)	(See page 5)
BOX CONTENTS	Included Parts	(See page 3)	

©2026 Southwire Company, LLC. All rights reserved.
*Registered Trademark & ™Trademark of Southwire Company, LLC.

DETAILED DIMENSIONS - INCHES (MM)

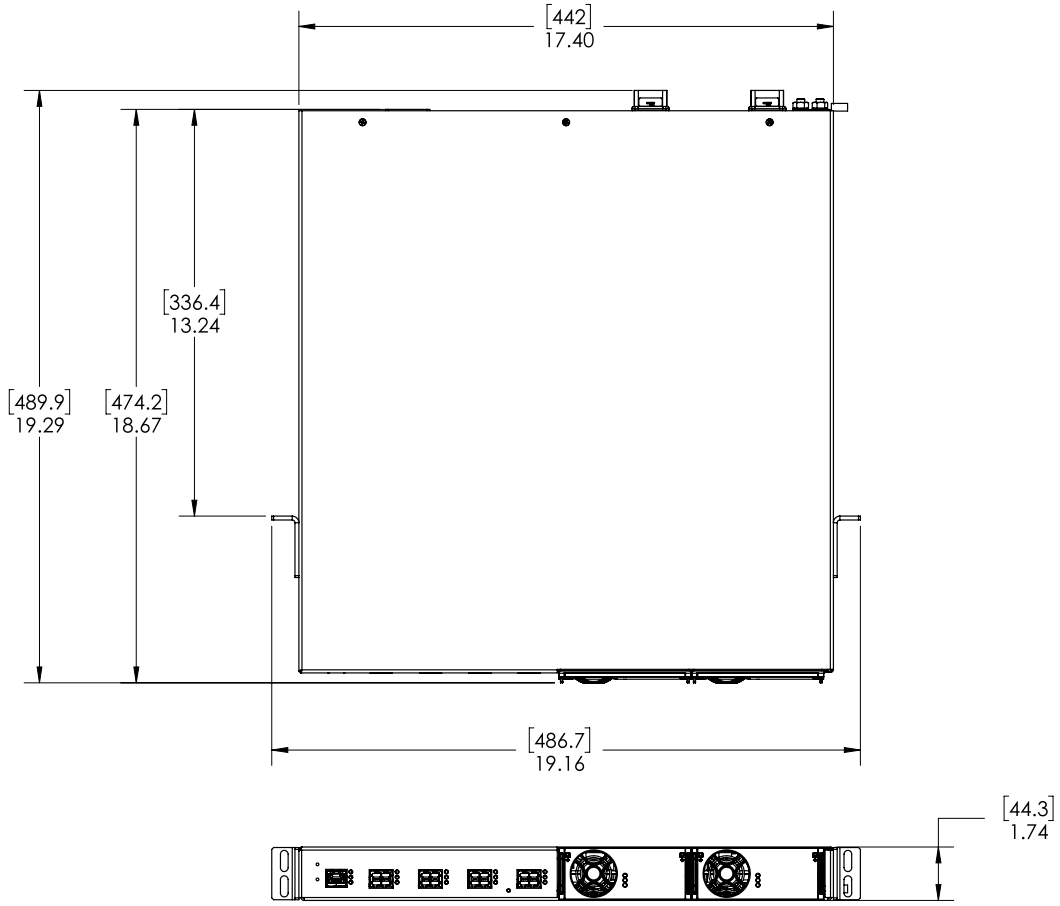

TEMPERATURE DERATING CURVE

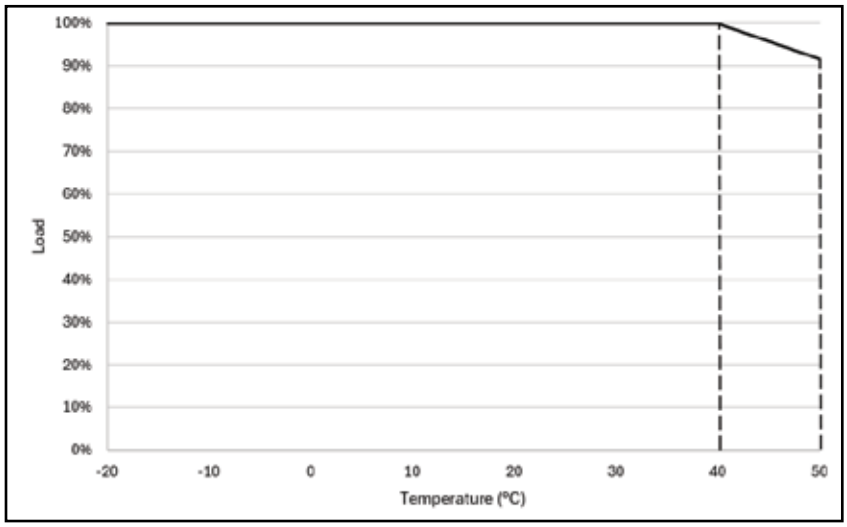

Note: Derating curve assumes 1U spacing between adjacent units.

CLTX6K3 INCLUDED PARTS LIST

- 1x CLTX6K3 Transmitter Chassis
- 1x CLPS3K Power Module (already installed)
- 2x Rack Mounting Brackets, fits 19" racks (already installed)
- 4x DE Output Connectors (MFN: 831-1102)
- 1x Dry Contact Input Connector (MFN: 1745894)
- 1x Alarm Relay Output Connector (MFN: 1952283)
- 1x Ground Lug (MFN: LCD10-14A-L)
- 2x ¼"-20 Thread Size, Steel Locknut with External-Tooth Lock Washer
- 2x 6-32 Thread Size, 3/8" Long, Black-Oxide 18-8 Stainless Steel Phillips Head Screws
- 1 x CBL-PWR-SAFD-L720P

©2026 Southwire Company, LLC. All rights reserved.
*Registered Trademark & ™Trademark of Southwire Company, LLC.

CONNECTION DIAGRAM

1 ETHERNET PORT
The management module provides the system with an Ethernet (IPv4/ IPv6) network interface. This allows the system to be connected to a local network for remote monitoring and management.

2 DIGITAL ELECTRICITY OUTPUT PORTS
(4) DE channels with the following pins:

PIN	DESCRIPTION
1	DE Output Pos(+)
2	DE Output Neg(-)



4 SOFTWARE REBOOT BUTTON
Push momentarily for SW reboot. The software LED will turn off for about 30 seconds. Once LED has turned back on, software is accessible.

6 DE CHANNEL LED INDICATORS
LED information is provided on page 10 of this quick start guide.

5 MGT LED INDICATORS
LED information is provided on page 10 of this quick start guide.

3 FACTORY RESET BUTTON
Hold for 5 seconds to reset the software settings to factory defaults. The "SW" LED will blink blue while reset is in progress. Transmitter card status will not be affected during the reset process.

11 DRY CONTACT INPUT
The CLTX6K3 features a dry contact input that enables the user's system to trigger the CLTX6K3 policy software to enable features such as load shedding for battery backup. The dry contact input should be connected to either an open circuit or closed circuit. Do not apply voltage to the dry contact. For details on this functionality, contact Southwire support.

Maximum Cable Length	3 m
Accepted Wire Gauge	14-22 AWG
Default Operating Mode	Open Circuit

12 ALARM RELAY OUTPUT
The alarm relay output port can be used to notify external devices of fault conditions on the CLTX6K3.

PIN	CONNECTIONS	DESCRIPTION
1	NC	Normally closed
2	GND 1	Common for NC conection
3	GND 2	Common for NO conection
4	NO	Normally open

7 GROUNDING STUD
See the "Grounding" section on page 7.

8 INPUT PORTS FOR MAX 6 KW OPERATION
Power cords must be installed in both input connectors when both power modules are installed.



9 INPUT PORT FOR MAX 3 KW OPERATION
Only one power cord must be installed in this input connector when a single power module is installed.

10 DEBUG PORT
For factory use only.

©2026 Southwire Company, LLC. All rights reserved.
*Registered Trademark & ™Trademark of Southwire Company, LLC.

WARNING!

Ensure that the unit is de-energized before contacting any exposed conductors. Up to 350 Vdc is present inside the unit while running.

Do not open the unit. There are no serviceable parts within the unit.

The minimum wire gauge for use with Southwire Transmitters is 18 AWG copper conductors.

Southwire TX Transmitter outputs are intended to be used with Southwire RX Receiver products only. Ensure that only Southwire RX Receiver products are powered by this transmitter unit.

The voltage rating of the transmission wiring between Southwire Transmitter and Receiver(s) must be a minimum of 450 Vrms.

Splice connections on the output of the transmitter are to be made within a UL listed junction box if installed within concealed spaces or where the splice may come in contact with a flammable material.

Line conductors cannot be separated by more than 8 inches.

Concerned industries should practice accurate assessment and recording of direct stray currents to gauge and control any adverse effects.

The device is equipped with one or dual detachable power cords. To remove mains, disconnect all power cords at appliance coupler.

This equipment is not suitable for use in locations where children are likely to be present.

WARRANTY STATEMENT

There are no serviceable parts within the CLTX6K3. Disassembling or modifying the unit and/or factory attached cables will void the warranty.

FCC CAUTION

Any changes or modifications not expressly approved by the party responsible for compliance could void the user's authority to operate this equipment.
Note: This equipment has been tested and found to comply with the limits for a Class A digital device, pursuant to part 15 of the FCC Rules. These limits are designed to provide reasonable protection against harmful interference when the equipment is operated in a commercial environment. This equipment generates, uses, and can radiate radio frequency energy and, if not installed and used in accordance with the instruction manual, may cause harmful interference to radio communications. Operation of this equipment in a residential area is likely to cause harmful interference in which case the user will be required to correct the interference at their own expense.
CAN ICES-003(A) / NMB-003(A)

SYMBOLS



Caution: Hazardous Voltages present when energized. Do not open the unit.



The device is equipped with one or dual detachable power cords.



PROTECTIVE EARTH REQUIREMENTS

Caution: All CLTX6K3 transmitter units must have a protective earth grounding connection to a facility earth connection for safe operation.

Note: Protective earth is provided by the corded connection. It is required that the protective earthing connection of the socket-outlet is verified before installation.

CAUTION: HIGH TOUCH CURRENT



©2026 Southwire Company, LLC. All rights reserved.
*Registered Trademark & ™Trademark of Southwire Company, LLC.

INSTALLATION INSTRUCTIONS

CAUTION
Input and Output wiring and over-current protection must be installed in accordance with all local and national electrical codes and requirements.

NOTE
After making/terminating input and output connections, ensure that there are no bare contacts or conductors. Conductors must be properly insulated from contact.

Readily accessible disconnect devices, such as a breaker, must be incorporated external to the CLTX6K3 for each source.

The plug/appliance coupler functions as a disconnect device. Ensure that the input socket/outlet is readily accessible.

GROUNDING
In addition to the protective earth connection provided by the input power cord, ground studs have been included for bonding the enclosure earth to that of the equipment rack or other related equipment. To make a connection to the ground studs, use the ground lug and locknuts included in the accessory kit. 10 AWG wire is recommended.

OUTPUT POWER CONNECTIONS & WIRING
The CLTX6K3 uses a two pin pluggable output connector. 18 - 12 AWG wire is recommended for output connections. Larger conductors are recommended for long cable runs. Use copper conductors only.

Output Conductor Installation:
1. Strip conductors by 0.45" before inserting into connector.
2. Lift orange lever and insert conductor in correct pin location based on the table below.
3. With conductor fully inserted, push down on orange lever.
4. Pull on conductor to ensure it is fully inserted.



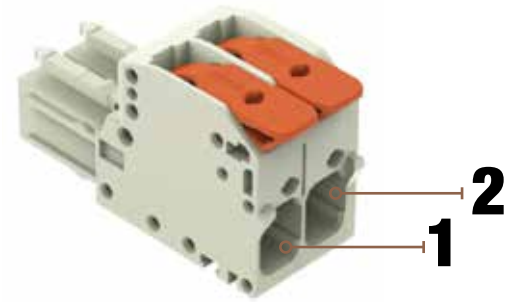

DE Output Connector (MFN: 831-1102)

PIN	DESCRIPTION
1	DE Output Pos(+)
2	DE Output Neg(-)

CAUTION
Ensure source power is de-energized prior to making input connection.

AC INPUT POWER SOURCE AND CONNECTIONS
CLTX6K3: Accepts 100 - 277 Vac
CLTX6K3 requires one connection to the AC power mains per each CLPS3K module used. For full power capability, greater than 208 Vac is required. The AC input connections are single phase or “bi-phase” connections consisting of L1 and L2 or Line and Neutral connections.

Any of the following cables should be used for the AC input connections to CLTX6K3:
- **CBL-PWR-SAFD-L720P (Included with Transmitter)**
- **CBL-PWR-SAFD-L620P (sold separately)**
- **CBL-PWR-SAFD-C20 (sold separately)**

Note: Southwire recommends using 208 Vac or greater for all installations. Use of 120 Vac should only be used for small demo or test systems.

DC INPUT POWER SOURCE AND CONNECTIONS
CLTX6K3: Accepts 260 - 400 Vdc

This variant requires one connection to a controlled DC source per each *CLPS3K* module used.

Note: The input power source must be a conditioned DC power supply system.

©2026 Southwire Company, LLC. All rights reserved.
*Registered Trademark & ™Trademark of Southwire Company, LLC.

INSTALLATION INSTRUCTIONS



CLTX6K3 Input Connector

Note: The maximum (and recommended) circuit breaker size for each input connection is 20 A.
Contact Southwire for more information.

PHYSICAL INSTALLATION

The CLTX6K3 transmitter are designed to be rackmounted in a 19" rack using provided rack-mount brackets. Use 19" to 23" rack mounting adapters, as required. The transmitter unit may be mounted in a horizontal or vertical orientation.

Note: If the unit is mounted vertically, the power modules must be at the bottom of the unit.

Follow the instructions below for rack-mount installations:

A) Elevated Operating Ambient - If installed in a closed or multi-unit rack assembly, the operating ambient temperature of the rack environment may be greater than room ambient. Therefore, consideration should be given to installing the equipment in an environment compatible with the maximum ambient temperature (Tma) specified by the manufacturer.

B) Reduced Air Flow - Installation of the equipment in a rack should be such that the amount of air flow required for safe operation of the equipment is not compromised.

C) Mechanical Loading - Mounting of the equipment in the rack should be such that a hazardous condition is not achieved due to uneven mechanical loading.

D) Circuit Overloading - Consideration should be given to the connection of the equipment to the supply circuit and the effect that overloading of the circuits might have on overcurrent protection and supply wiring. Appropriate consideration of equipment nameplate ratings should be used when addressing this concern.

E) Reliable Earthing - Reliable earthing of rack-mounted equipment should be maintained. Particular attention should be given to supply connections other than direct connections to the branch circuit (e.g. use of power strips).

Note: For full power operation, allow 1U separation between the CLTX6K3 transmitter and other equipment. For installations operating at half power (or installations with full redundancy), no separation between adjacent units is required.

CLPS3K POWER MODULE INSTALLATION

Up to two CLPS3K modules may be installed in the CLTX6K3 Transmitter. All CLPS3K Power Modules may be “hot swapped” for in-service maintenance purposes.

1. Place a small screwdriver under the release button in the windows located in the upper corners of the CLPS3K module.

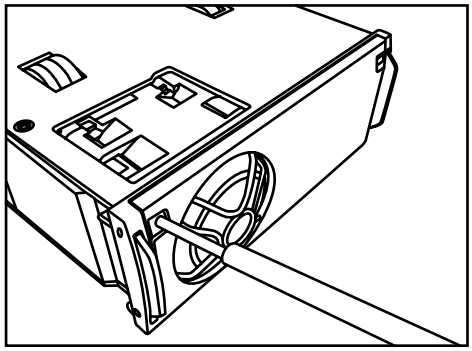

2. Pull the screwdriver downwards to release the CLPS3K extraction handle, repeat on opposite side.

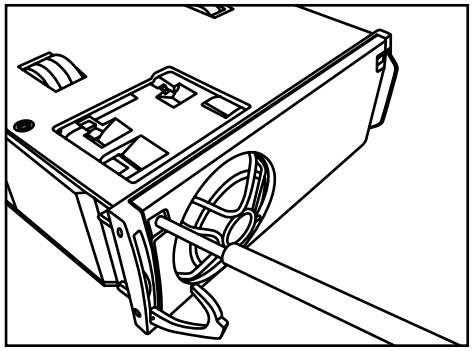

3. Push CLPS3K module into a bay of the transmitter shelf until it firmly seats in the connector.



4. Press extraction levers upward until they fully seat and lock into place. The CLPS3K module is now locked into place. Repeat the above steps for each

©2026 Southwire Company, LLC. All rights reserved.
*Registered Trademark & ™Trademark of Southwire Company, LLC.

INSTALLATION INSTRUCTIONS

CLPS3K module to be populated. To remove a CLPS3K module, perform the above steps to release the extraction handles, and pull the CLPS3K from the transmitter using the handles.



SOFTWARE WEB UI LOGIN

Units are pre-programmed from the factory with a static IP address 192.168.1.200, netmask 255.255.255.0. To connect to the unit, assign a static IP address on your laptop ethernet adapter in the same subnet, such as:

- **Address 192.168.1.100**
- **Subnet Mask: 255.255.255.0**
- **Gateway: 192.168.1.1**
- **Preferred DNS: 8.8.8.8 (any value will work)**

Access the web interface by opening one of the following addresses in a supported browser:
http://[hostname].local or http://192.168.1.200

Devices will also use a default AutoIP address of 169.254.42.42. If AutoIP is not disabled on your laptop, you can try http://169.254.42.42 without configuring a static IP. It may be necessary to turn off Wi-Fi on your laptop when using a direct ethernet connection between the device and a laptop.
The factory hostname, username and password can be found on the unit label on the top or side of the device.



IP Address & Password



IP CONFIGURATION & HOSTNAME

Hostname and IP address may be configured from the Network Settings page. Click “Apply Changes” to save new settings.

After network settings are saved, the browser will redirect to the new IP address or hostname after settings are applied. In most cases it will be necessary to login to the web UI again after the redirect.

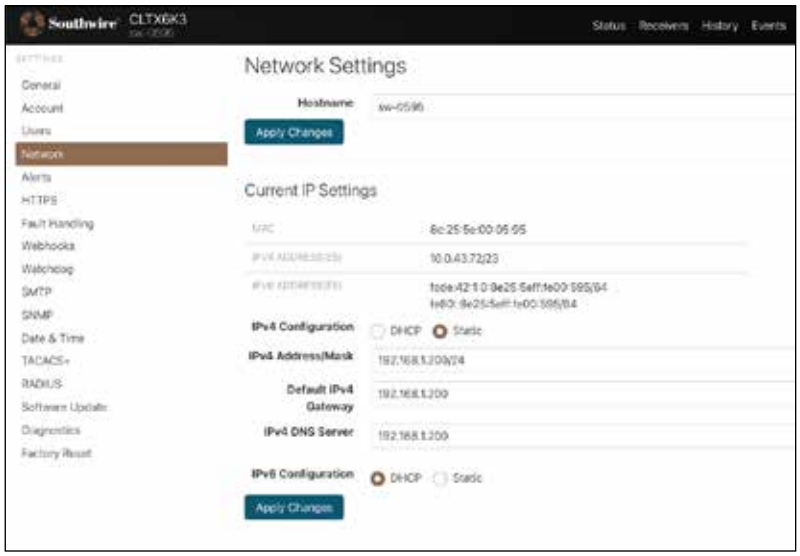

©2026 Southwire Company, LLC. All rights reserved.
*Registered Trademark & ™Trademark of Southwire Company, LLC.

INSTALLATION INSTRUCTIONS

OUTPUT CHANNEL LED CODES

NORMAL STATES	LED PATTERN	NOTES
Normal Operation	GRN DE ON RED FAULT OFF BLU COM BRIEF BLINK *(heartbeat)*	
Boot-up	GRN DE OFF RED FAULT OFF BLU COM BLINK *(booting up)*	Start-up sequence occurs when power is first applied to the receiver.
Pre-charge DE	GRN DE BLINK *(slow)* RED FAULT OFF BLU COM OFF	Part of normal start-up sequence
Pre-charge Load	GRN DE BLINK RED FAULT OFF BLU COM OFF	Part of normal start-up sequence

LED PATTERN	FAULTS	FAULT CODE	TROUBLESHOOTING
GRN OFF RED BLINK = FAULT CODE BLU OFF	Disconnected	1 Blink	Check DE wiring and connections
	Startup	2 Blinks	Check wiring Check receiver Check cable length & gauge
	Transmission	3 Blinks	Check wiring Check receiver Check cable length & gauge Reduce load on the receiver output
	Overload	4 Blinks	Reduce load on the receiver output Check receiver Check wiring
	Temperature	5 Blinks	Reduce ambient temperature Reduce load
	Short Circuit	6 Blinks	Check for damaged wiring Check for short in termination/ connectors Reduce load
	Input Power	8 Blinks	Check wiring Check power module and main power
	Internal	9 Blinks	Internal hardware failure Contact Southwire support
GRN OFF RED BLINK = FAULT CODE BLU BLINK = FAULT CODE	Internal	Red/Blue Alternate	Internal hardware failure Contact Southwire support

MANAGEMENT UNIT (MGT) “SW” LED CODES

LED PATTERN	DURATION	MEANING
BLU	5s after power on/ reboot	Software module power-on and pre-boot. Pushing the “Factory” button during this time will cause the device to boot into Recovery Mode
GRN	30s (approx.)	Software is booting (green “heartbeat” blink pattern)
GRN	Until reboot	Software is running
BLU	20s (approx.)	Factory reset is in progress
BLU	Until reboot	Software is in Recovery Mode (blue “heartbeat” blink pattern)

©2026 Southwire Company, LLC. All rights reserved.
*Registered Trademark & ™Trademark of Southwire Company, LLC.

AVERTISSEMENT!

Assurez-vous que l'unité est hors tension avant de contacter des conducteurs exposés. Jusqu'à 350 Vdc est présent à l'intérieur de l'unité pendant le fonctionnement.

N'ouvrez pas l'appareil. Il n'y a aucune pièce réparable dans l'unité.

Le calibre de fil minimum à utiliser avec les émetteurs Southwire GEN2 est constitué de conducteurs en cuivre de 18 AWG.

Les sorties de l'émetteur Southwire TX sont destinées à être alimentées uniquement avec les produits récepteurs Southwire RX. Assurez-vous que seuls les produits récepteurs Southwire RX sont sont alimentés par cet émetteur.

La tension nominale du câblage de transmission entre l'émetteur Southwire TX et le(s) récepteur(s) RX doit être d'au moins 450 Vrms.

Les connexions d'épissure à la sortie du transmetteur doivent être effectuées dans une boîte de jonction homologuée UL si elles sont installées dans des espaces cachés ou là où l'épissure peut entrer en contact avec un matériau inflammable.

Les conducteurs de ligne ne peuvent pas être séparés de plus de 8 pouces.

Les industries concernées doivent procéder à une évaluation et à un enregistrement précis des courants vagabonds directs afin d'évaluer et de contrôler tout effet indésirable.

L'appareil est équipé d'un ou de deux cordons d'alimentation détachables. La mise hors tension se fait en débranchant tous les cordons de l'appareil.

Cet équipement ne convient pas à une utilisation dans des endroits où des enfants sont susceptibles d'être présents.

SYMBOLES

Attention: Des tensions dangereuses sont présentes lorsque l'appareil est sous tension. N'ouvrez pas l'appareil.

EXIGENCES RELATIVES À LA TERRE DE PROTECTION

Attention: Toutes les unités émettrices CLTX6K3 doivent avoir une connexion de mise à la terre de protection avec une connexion de mise à la terre de l'installation pour un fonctionnement sûr.

ATTENTION: COURANT DE CONTACT ELEVE



ATTENTION

Le câblage d'entrée et de sortie et la protection contre les surintensités doivent être installés conformément à tous les codes et exigences électriques locaux et nationaux.

©2026 Southwire Company, LLC. All rights reserved.
*Registered Trademark & ™Trademark of Southwire Company, LLC.