SIDES	BOTTOM
Material:Zinc plated steel	

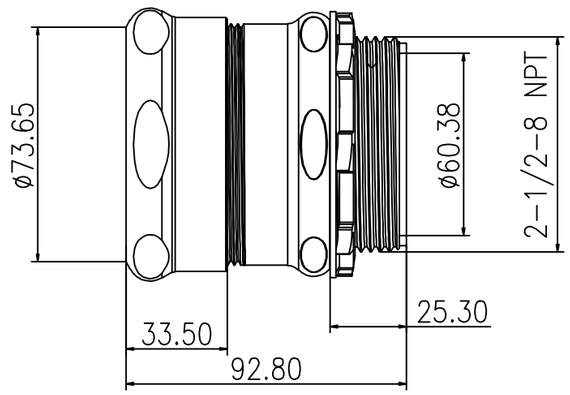

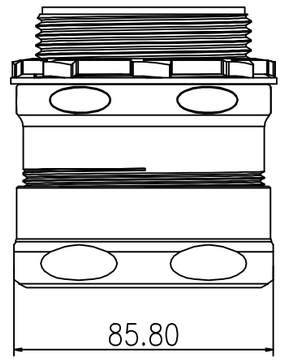

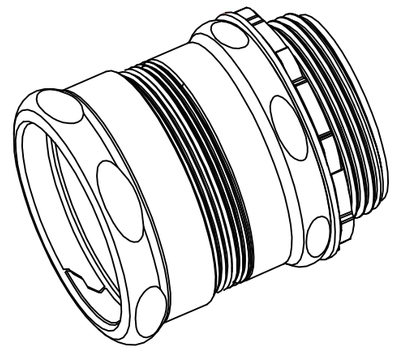

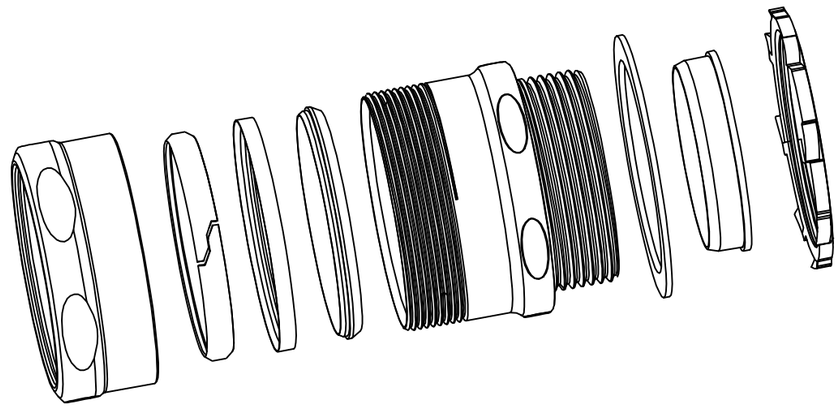

STANDARD PACKING	GARVIN INDUSTRIES	
10 PCS	TITLE 2-1/2" Compression connecotor raintight	
	SIZE A4	DS-CNNR-250	REV A

TRADE REFERENCE TERMS

-A4