SIDES	BOTTOM

1 pcs #1/2-13×2-1/4 screw install

1 pcs #1/2-13 hex nut install

Material: malleable casting,Zinc plated

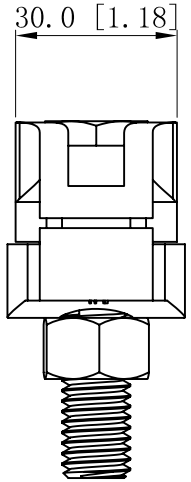

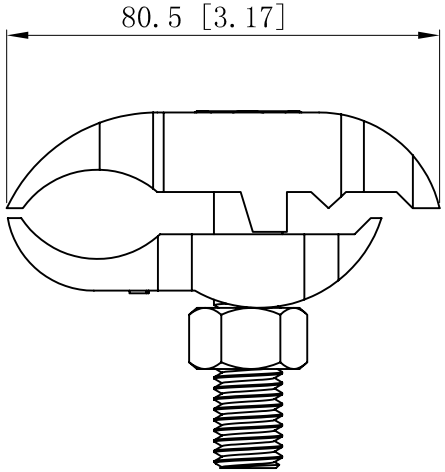

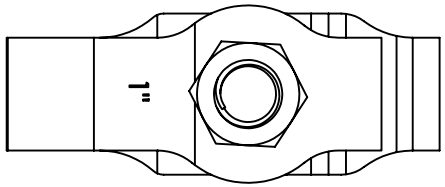

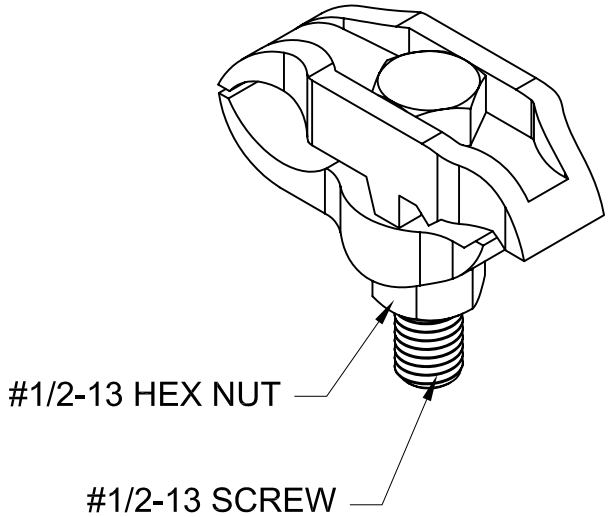

This data sheet is for reference only .GARVIN INDUSTRIES reserves the right to make changes to the design without prior notice.

DESCRIPTION

TRADE REFERENCE TERMS

STANDARD PACKING	GARVIN INDUSTRIES		
50 PCS	TITLE: CONDUT CLAMPS		
	SIZE: A4	DWG NO.: PAR100	REV
	DATA SHEET		