SIDES	BOTTOM
1 Pcs TWH-150 Sealing ring	
1 Pcs TWH-150 With lnsulated throat	

REVISIONS			
SYM.	BY.	REVISIONS	DATE
A.			

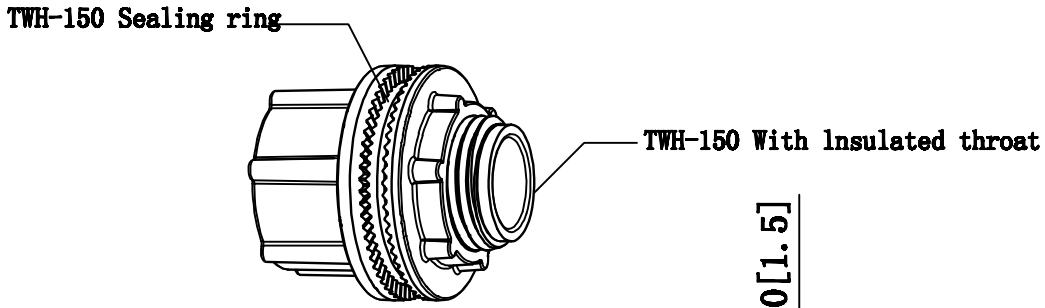

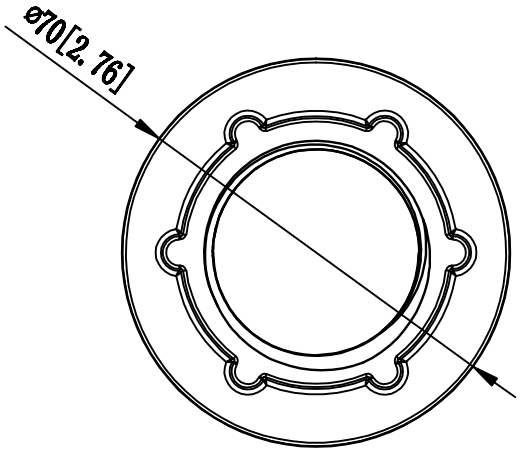

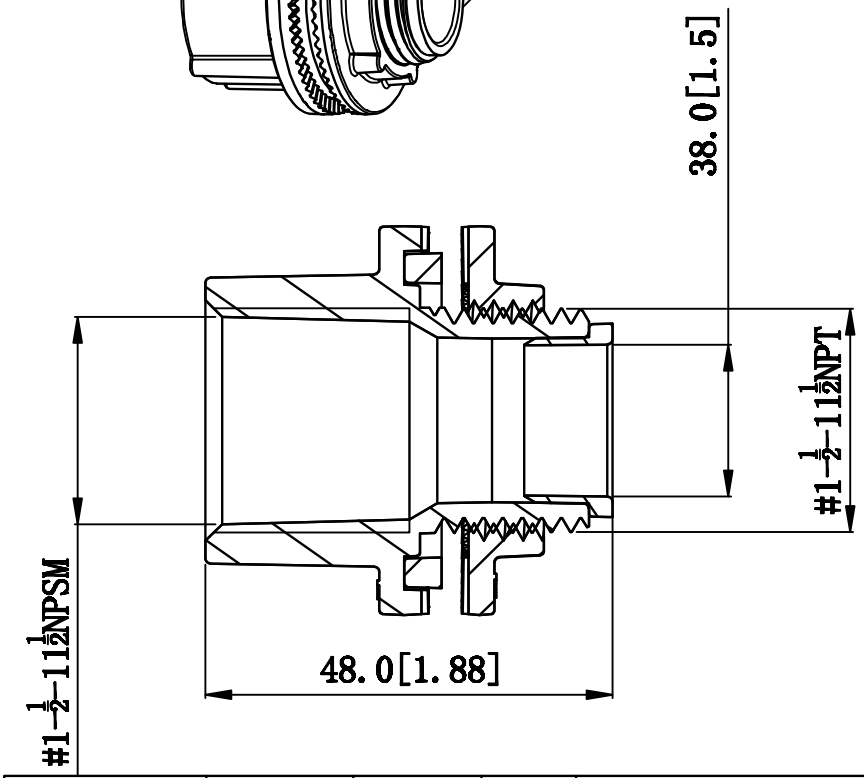

NOTES:

1.All dimensions in millmeters and [inches];

2.Free of sharp edge and burrs.max burr 0.5[0.0196].

UNLESS OTHERWISE SPECIFIED DIMENSIONS ARE IN MM/INS TOLERANCES ARE: X.X: ±0.04[±0.1] X.XX: ±0.01[±0.03] X.XXX: ±0.005[±0.005]		NAME	DATE	GARVIN INDUSTRIES
	DRAWN			TITLE
	CHECKED			
MATERIAL ZAMAK	APPROVED (A)			
	APPROVED (Customer)			

THIRD ANGLE PROJECTION

FINISH

DO NOT SCALE DRAWING INTERPRET PER ASME Y14.5M-1994

THIS DRAWING THE INTELLECTUAL PROPERTY OF GARVIN INDUSTRIES AND IS LOANED SUBJECT TO RETURN UPON REQUEST. TITLE TO THE DRAWING IS HERE SOLD OR WHATSOEVER YOU ARE RECEIVING THIS DRAWING IT IS TO BE USED ONLY PURSUANT TO WRITTEN LICENSE OR WRITTEN RIGHT TO USE FROM GARVIN INDUSTRIES. ALL RIGHTS TO DESIGN, ADVERTISING AND REPRODUCTION BY GARVIN INDUSTRIES. POSSESSION OF THIS DRAWING IS ACCEPTANCE OF THE FOREGOING.

SIZE	DWG NO.	REV
A4	WH150	
SCALE: 1:1	PRINT DATE / REFERENCES	SHEET 1 OF 1