SIDES	BOTTOM
6 1/2″KNOCKOUTS	3 1/2″ KNOCKOUTS
3 1/2″-3/4″ MOON KNOCKOUTS	2 1/2″-3/4″ MOON KNOCKOUTS
2 PCS 8-32×1/2 Screws Installed	
Material:Steel-0.0625″-G60 Galvanized	

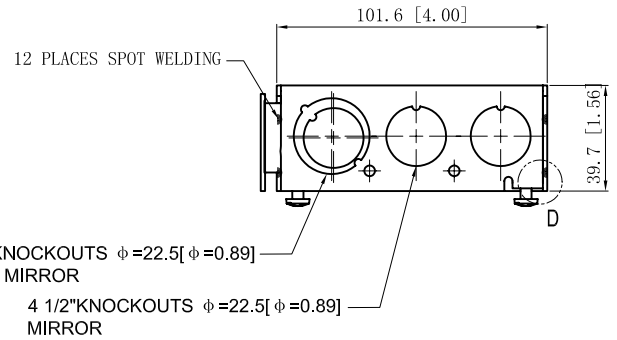

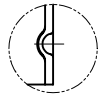

WELDING STYLE DETAIL VIEW D

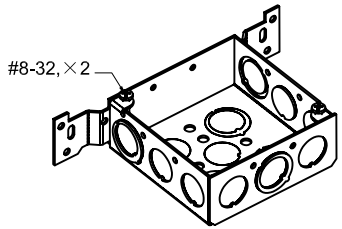

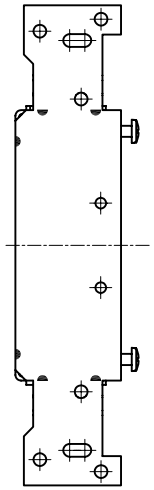

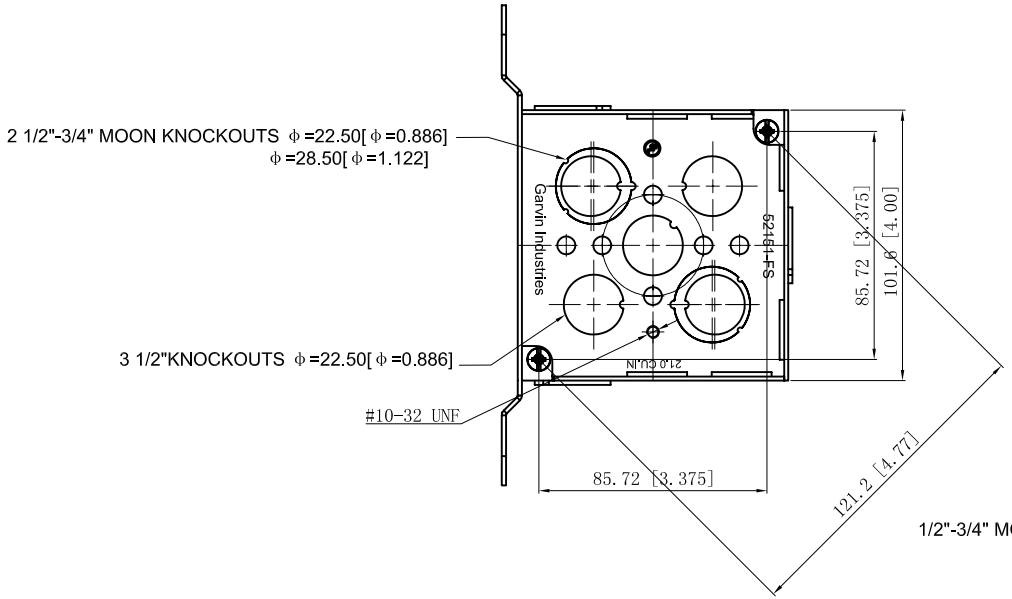

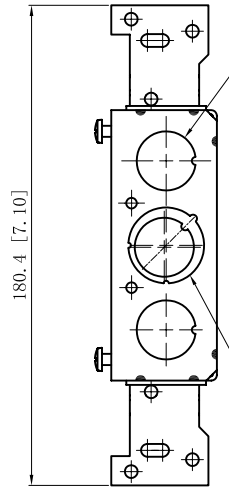

DESCRIPTION

TRADE REFERENCE TERMS

This data sheet is for reference only .GARVIN INDUSTRIES reserves the right to make changes to the design without prior notice.

STANDARD PACKING	GARVIN INDUSTRIES		
25 PCS	TITLE: 4″SQ. BRACKET BOXES (1-1/2″DEEP)		
	SIZE: A4	DWG NO.: 52151-FS	REV: C
	DATA SHEET		