Clamp double for 2 grooved contact wires

Item number E0267-02

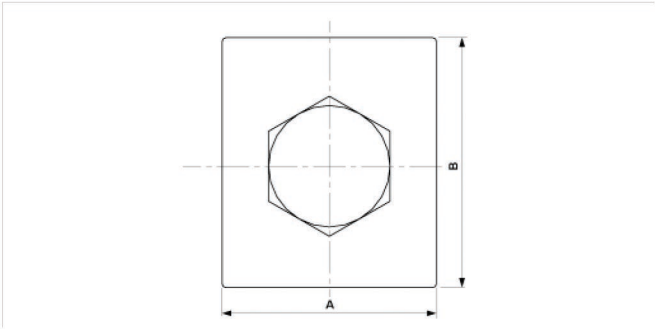

Dimensions

A: 30 mm
B: 35 mm

Material and weight

Material: Cu

Weight: 0.215 kg

Comments

- Contact wires at equal height
- For grooved contact wire 80-120 mm²(Other contact wire sections on request)