SIDES	BOTTOM

Material:Zinc plated steel

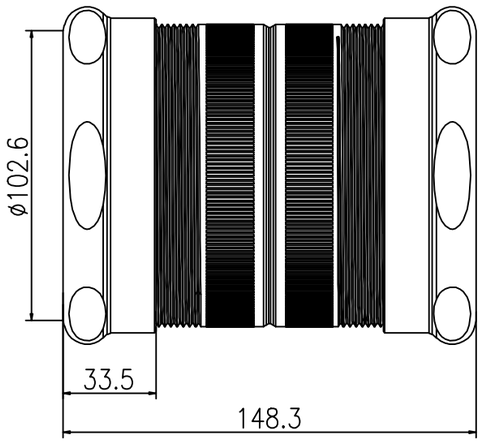

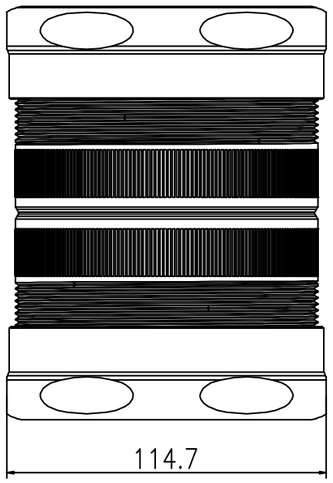

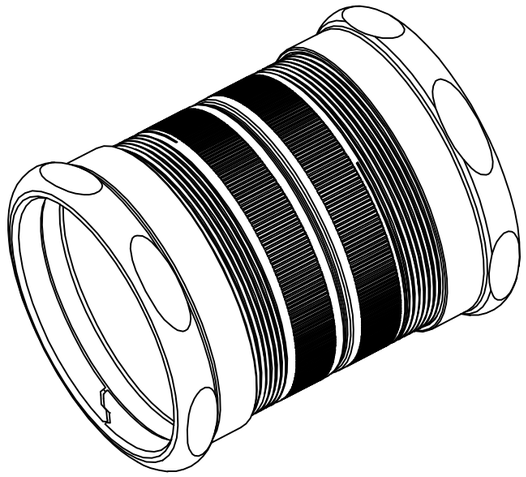

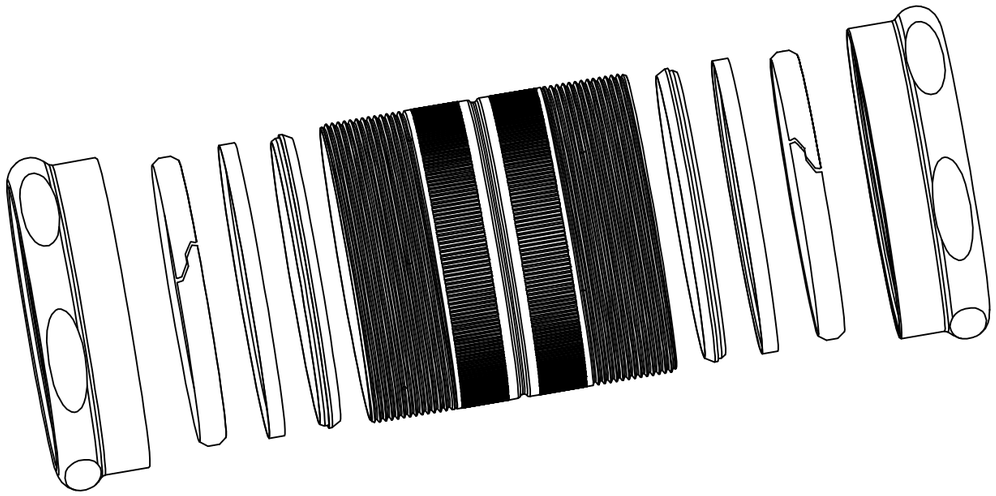

TRADE REFERENCE TERMS

STANDARD PACKING
5 PCS

GARVIN INDUSTRIES

TITLE: 3-1/2" Compression coupling raintight

SIZE	DWG NO.	REV
A4	DS-CCPR-350	A