| SIDES | BOTTOM |
|---|---|
| | |
| | |
| | |
| | |

Material:malleable casting, Hot dip galvanized

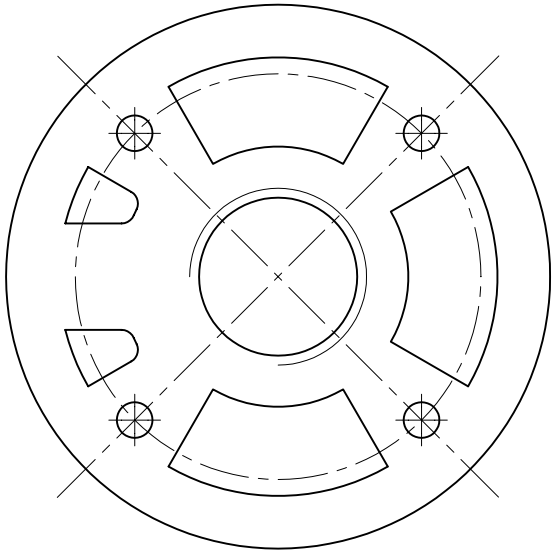

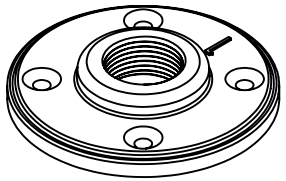

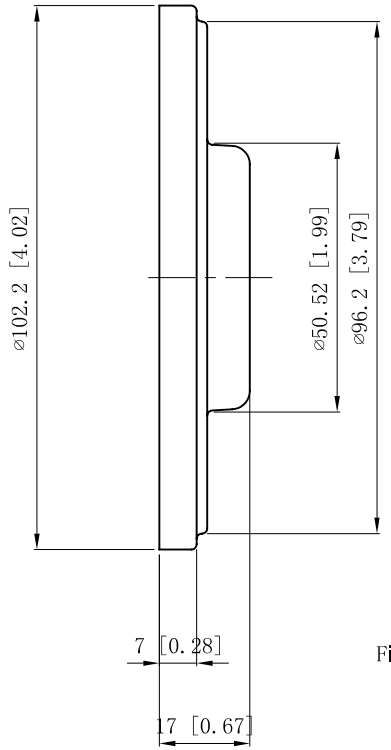


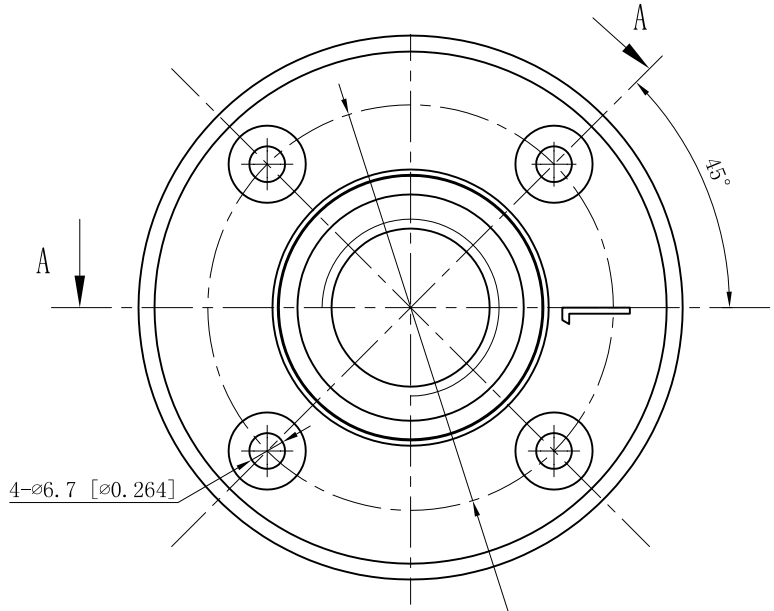


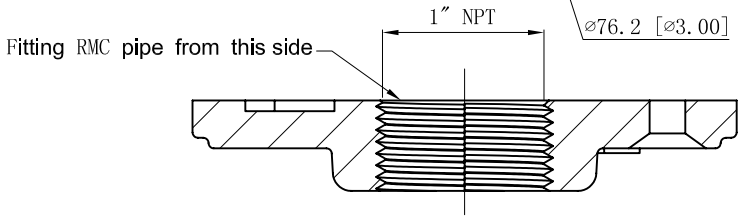


CUTAWAY VIEW A-A

This data sheet is for reference only .GARVIN INDUSTRIES reserves the right to make changes to the design without prior notice.

DESCRIPTION

TRADE REFERENCE TERMS

| STANDARD PACKING | GARVIN INDUSTRIES | | |
|---|---|---|---|
| 25 PCS | TITLE: FLOOR FLANGED | | |
| | SIZE: A4 | DWG NO.: FF-100 | REV |
| | DATA SHEET | | |

garvinindustries.com