SIDES	BOTTOM

Material:Zinc plated steel

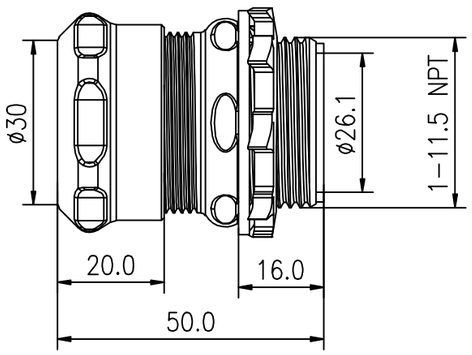

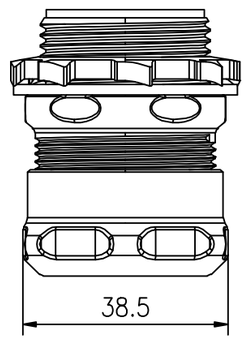

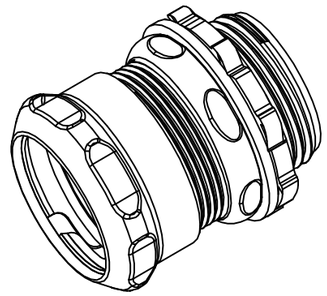

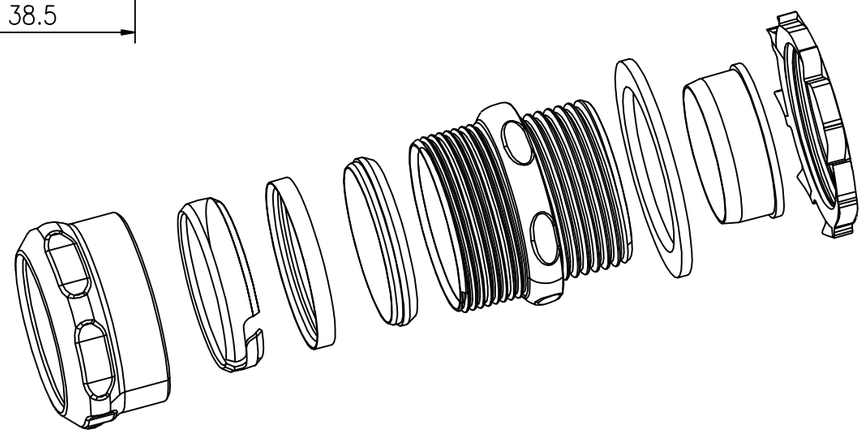

STANDARD PACKING
25 PCS

TRADE REFERENCE TERMS

GARVIN INDUSTRIES

TITLE: 1" Compression connecotor raintight

SIZE	DWG NO.	REV
A4	DS-CCNR-100	A

-A4