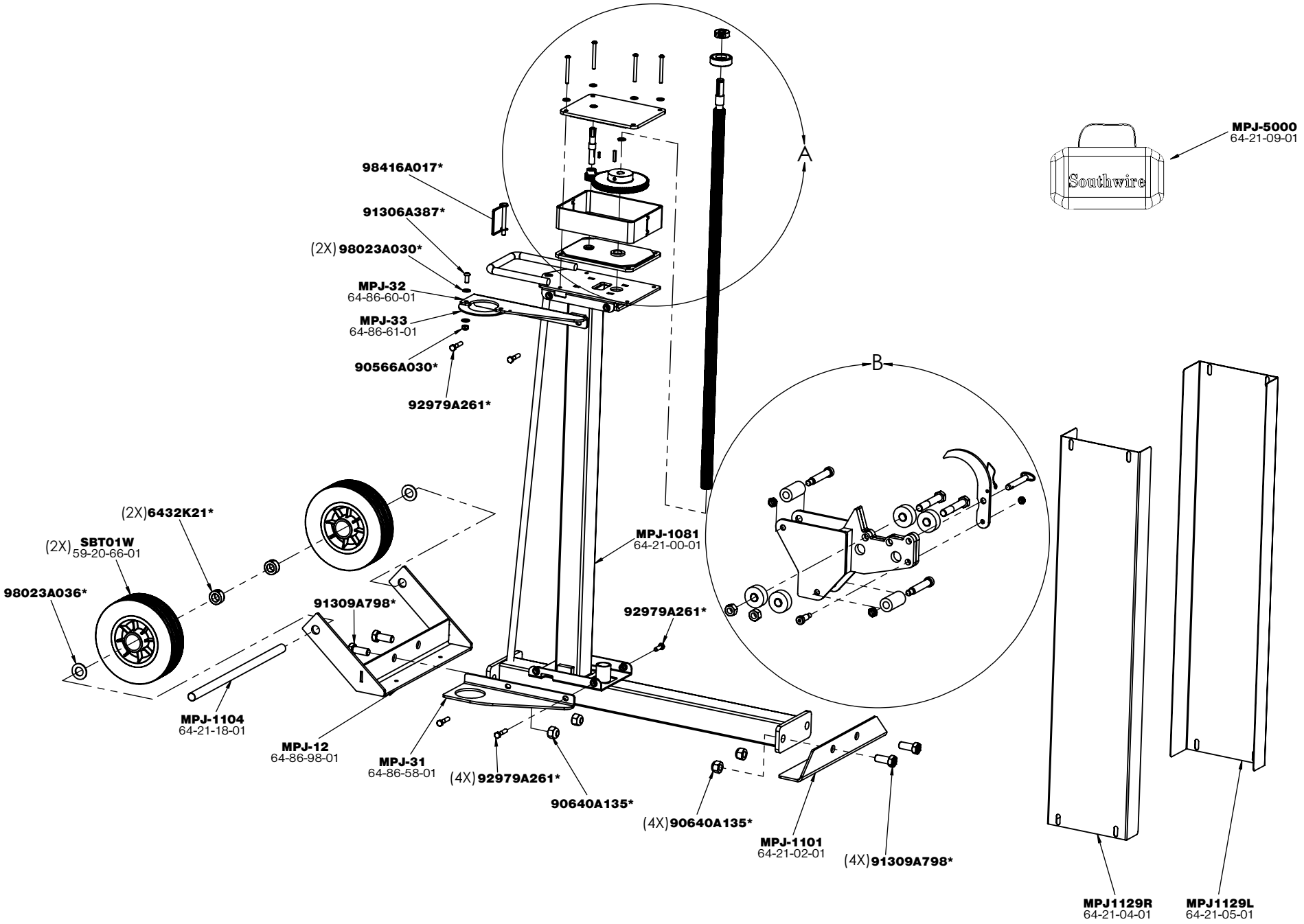

***McMaster Carr Part Number**

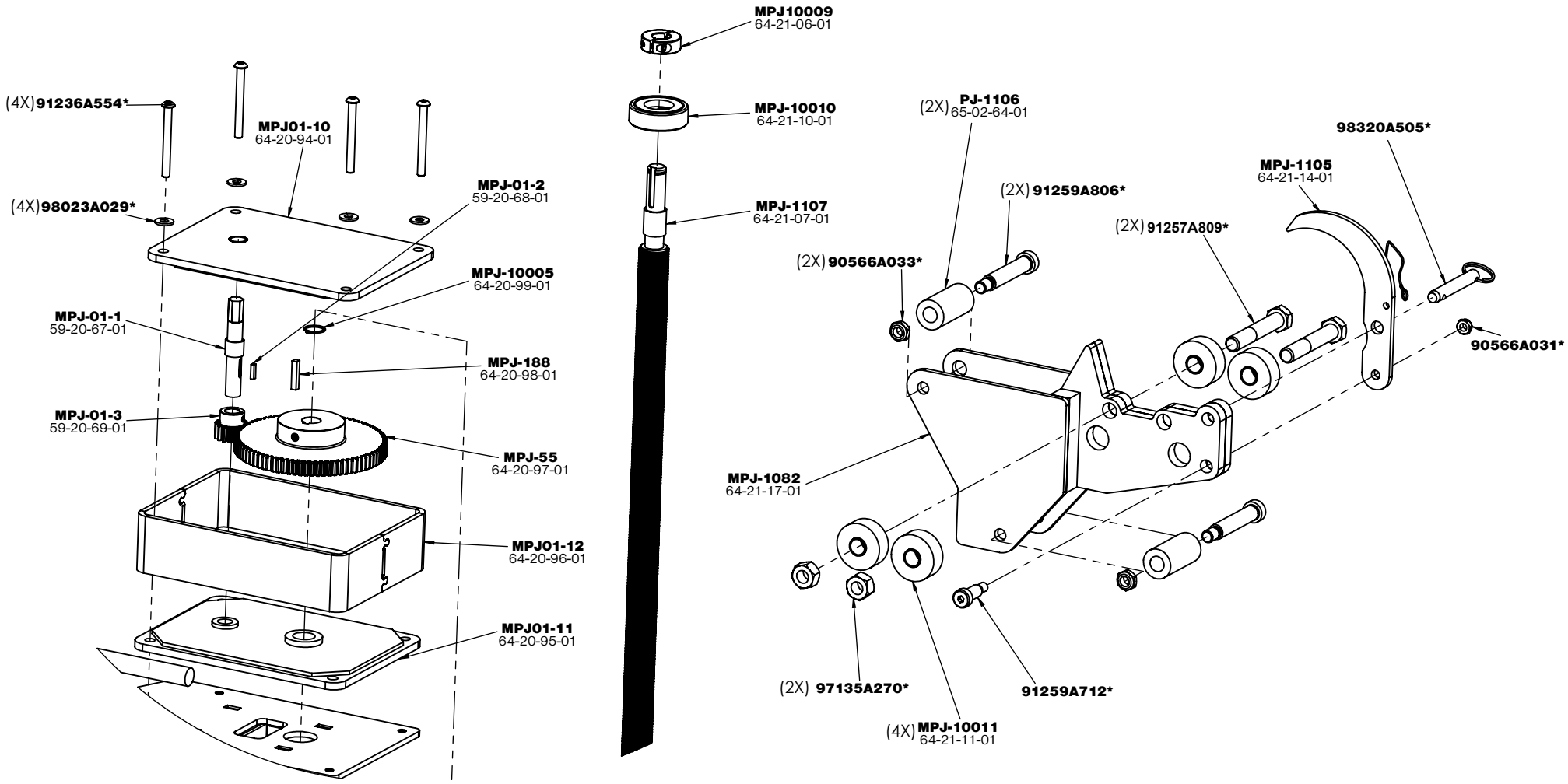

***McMaster Carr Part Number**