SIDES	BOTTOM

Material:Steel-(C1008-C1018) Galvanized

ITEM	A (NPSM)	B (NPSM)	C	MARK	STD.PKG
RB-25050	2-1/2"	1/2"	1.18"	2 1/2"-1/2"	5
RB-25075	2-1/2"	3/4"	1.18"	2 1/2"-3/4"	5
RB-250100	2-1/2"	1"	1.18"	2 1/2"-1"	5
RB-250125	2-1/2"	1-1/4"	1.18"	2 1/2"-1-1/4"	5
RB-250150	2-1/2"	1-1/2"	1.18"	2 1/2"-1-1/2"	5
RB-250200	2-1/2"	2"	1.18"	2 1/2"-2"	5
RB-300100	3"	1"	1.18"	3"-1"	1
RB-300125	3"	1-1/4"	1.18"	3"-1 1/4"	1
RB-300150	3"	1-1/2"	1.18"	3"-1 1/2"	1
RB-300200	3"	2"	1.18"	3"-2"	1
RB-300250	3"	2-1/2"	1.18"	3"-2 1/2"	1
RB-350200	3-1/2"	2"	1.18"	3 1/2"-2"	1
RB-350250	3-1/2"	2-1/2"	1.18"	3 1/2"-2 1/2"	1
RB-350300	3-1/2"	3"	1.18"	3 1/2"-3"	1
RB-400200	4"	2"	1.18"	4"-2"	1
RB-400250	4"	2-1/2"	1.18"	4"-2 1/2"	1
RB-400300	4"	3"	1.18"	4"-3"	1
RB-400350	4"	3-1/2"	1.18"	4"-3 1/2"	1
RB-500400	5"	4"	1.18"	5"-4"	1
RB-600500	6"	5"	1.18"	6"-5"	1

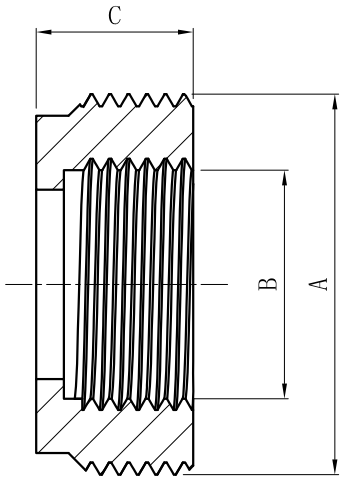

CUTAWAY VIEW A-A

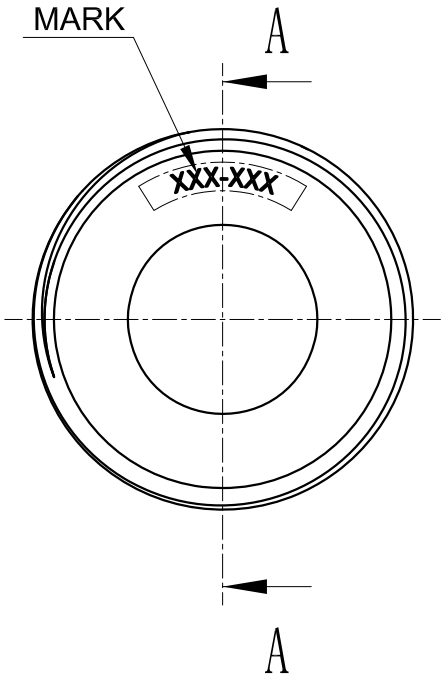

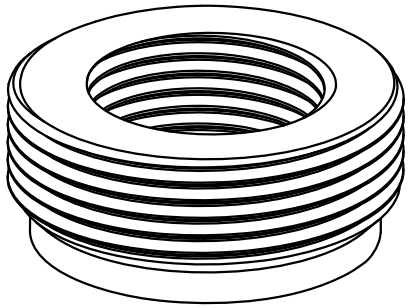

DESCRIPTION

TRADE REFERENCE TERMS

This data sheet is for reference only .GARVIN INDUSTRIES reserves the right to make changes to the design without prior notice.

STANDARD PACKING	GARVIN INDUSTRIES		
SEE ABOVE	TITLE STEEL REDUCING BUSHING		
	SIZE A4	DWG NO. RB-STEEL	REV A

garvinindustries.com