Bull ring small, Ø inside = 50 mm

Item number E1427-01

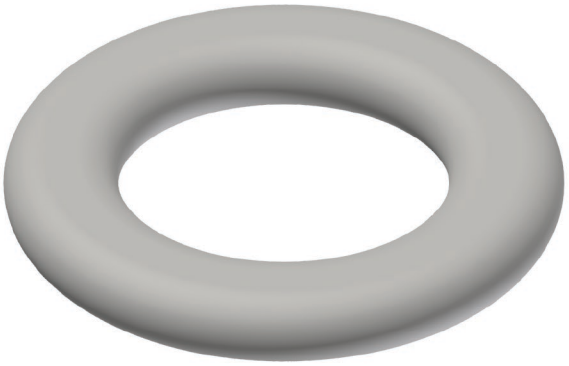

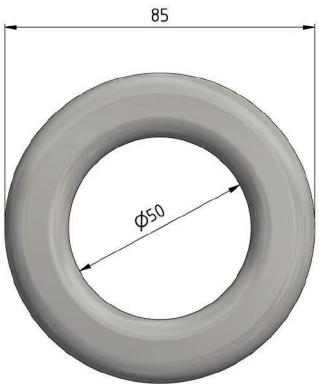

Dimensions

Ø1: 50 mm
A: 12 mm
Ø2: 85 mm

Material and weight

Weight: 0.300 kg
Material: STL HDG

Loads

Breaking load: 43.5 kN

Southwire™

Kummler+Matter
A COLAS RAIL COMPANY

Contact Us: Transit@southwire.com